Installation and Maintenance Manual

Industrial Swing Gate Operator

Model: ASA244BS

Made in Australia from Australian & quality imported components

January 2010

N14870

CONTENTS

Section 1	Safety Precautions	Page 3
Section 2	Specifications	Page 4
Section 3	Installation	Page 4
	Electrical Connections	Page 6
	CB6 Control Board	
	Commissioning	Page 8
Section 6	Manual Release Instructions	Page 9
Section 4	Maintenance	Page 10
Section 5	Warranty	Page 11
Annexure	Control Board Layout for 24v Operators	
	Schematic Wiring Diagram	

1. SAFETY PRECAUTIONS

WARNING! FAILURE TO FOLLOW THESE SAFETY PRECAUTIONS AND INSTALLATION INSTRUCTIONS COULD RESULT IN INJURY OR DEATH AND/OR DAMAGE TO PROPERTY AND EQUIPMENT.

- Appropriately licensed and competent personnel only should install the automation equipment.
- The operators are designed specifically to open and close sliding gates or doors and should not be used for any other purpose.
- Before commencing installation, read through this installation manual.
- Check that the operator and controls are in new condition and have not been damaged in transit.
- Check the gate or door and it's associated support posts and walls to protect against shearing, compression and other various traps which could cause serious injury or death. Take into consideration the general installation and surrounding environment.
- Check the gateposts or mounting structure has the necessary strength and rigidity to support the operator and the load of the opening and closing gate motion.

CAUTION!

Always incorporate the appropriate Photo Electric Cells, Induction Loops and any other safety devices to protect both equipment and personnel. Extra caution should be employed when using operator in auto close mode.

- Display any necessary signs to indicate any danger areas and automatic operation of the gate or door.
- The operators are not designed to be used in any hazardous areas or areas subject to flooding etc.
- All electrical connections and wiring must be performed with AS/NZS 3000-2007 as the guidelines. (Or its counterpart for other countries outside of Australia and New Zealand)

WARNING! ELECTRICITY CAN KILL

- The manufacturer of the automation equipment is not responsible for the damage which may be caused to either the operator, gate or door and any other person or equipment when: -
    - Wrong or poor installation practices were performed.
    - No or inadequate safety devices were used.
    - Either the surrounding structure or the gate or door strength and rigidity was not sufficient for the task in hand.
    - Inefficient locking devices were employed.
    - Poor maintenance on the equipment.
    - Any other circumstances beyond the manufacturers control.
- Isolate power before attempting any maintenance, qualified personnel only to carry out maintenance
- Only original spare parts are to be used should there be a requirement for them.
- Keep loose clothing and hands clear of the gate whilst in operation or potentially able to be operated.
- The installer should provide all information concerning the use of the automation equipment as well as instructions regarding the manual override and maintenance procedures to the users of the system.

2. SPECIFICATIONS (subject to change without notice)

WEIGHT: 41kgs (including arms)
MOTOR: 24v 120w
DUTY CYCLE: 100%
SPEED: 8-12 sec/90°

WIRING REQUIREMENTS:
240v on Control Box side
2 – 2.5mm^2 cables to operator for motor
3 – 1.5mm^2 cables to operator for limits
Control input cables, Output signal cables
NOTE: If the cable run is over 10m long, shielded cable is to be used for all cables

SIZE:

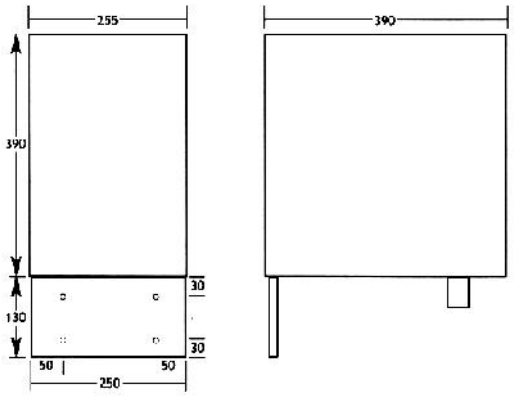

GATE SIZE:

Weight	Up to 400kg approx.
Open Bar Gate	Up to 4.5m approx.
Clad Gate	Up to 4.0m approx.

NOTE:
- Specifications based on gate height of approximately 1.8m.
- Specifications and in particular the suggested gate sizes can vary depending upon other variables such as friction of hinges, environmental factors, type of cladding and external influences which may assist or degrade the recommended gate sizes.

3. INSTALLATION DETAILS

After reading the previous sections in this manual, and having checked for suitable installation, proceed as follows:-

Electrical Cabling

- A suitably rated Isolator and 240v power supply should be available near to where the gate operator control box is to be mounted.
- If electrical cabling needs to be run across the driveway (where the single gate operator is on the opposite side to the control box) then ensure the appropriate number of cables (see wiring requirements) are run in conduit and are installed at the correct depths and manner for both the mains voltage cables and low voltage cables.
- Wiring for photo electric cell cabling and safety induction loops etc.

Mechanical Installation

- Firstly determine which gate rail the operator arm is to be mounted to.
- Run a level from the top of the gate rail across to where the operator is to be installed onto either wall or post.
- Draw a horizontal line on the post or wall which becomes the mounting position of the operator where the top 2 mounting holes are in line with your level line.

- Ideally weld the mounting plate provided to the steel post and use extra strengthening brackets if necessary to ensure a solidly fixed mounting plate (i.e. strengthening brackets may be required if post is less than approximately 150mm wide).

- If mounting to masonry or similar, either drill holes or weld tags onto the mounting plate or as a last resort fix the operator straight to the wall preferably using suitable chemical type anchors to ensure a firm mounting is obtained.
- If fixing without mounting plate ensure spacers (i.e. washers or nuts) are used between the wall and the operator to allow for the cover to fit.

Lift operator into position and bolt to the mounting plate.

- Turn the knurled disc anticlockwise and position arms so they are approx. 10° off of being straight when gate is fully closed.

- Mark where the gate bracket is to be fixed onto the gate rail, ensuring both arms are in a horizontal and level plane.
- Fully open the gate and realign the gate bracket to the marked position to ensure there is adequate side room for the arms to swing. If not, the last two steps may have to be repeated using a cut down secondary arm.
- Now attach the gate bracket to the gate rail with bolts suitable to handle the load and forces the gate and operator will provide (normally 10mm).

ELECTRICAL CONNECTIONS

OPERATORS

- Connect 2 – 2.5mm^2 cables for the motor to the terminal strip provided.
- Connect 3 – 1.5mm^2 cables for the limits to the terminal strip provided.
- Connect shield to chassis (if over 10m runs).

CONNECTION TO CONTROL BOARD:-

Supply

- Connect a 10A 240v supply to din rail terminals labelled A & N. Connect earth to din rail terminal.

Motor Wires

- Connect cable to din rail terminals labelled ‘motor 1’.
- Connect shield to earth terminal.

Control

- Connect low voltage limit switch wires to limit switch terminals on circuit board. Note the common terminal and open/close terminals for motor one and motor two.
- Connect shield to earth terminal.

Control Inputs

The P.E, OPN and STP inputs require a normally closed switch contact and therefore should be shorted to the COM terminal if not used. This is done via bridging links already on the circuit board (bottom left corner) The CLS, OSC and PED inputs require a normally open switch contact and therefore should be left unconnected if not used. All the switch inputs of this control board including the limit switch inputs require a switch contact only. Do not connect any switches, which provide a voltage to the control board as this will damage the control board. If the inputs are 12/24v or has long wiring associated with it use an IM-1 module to isolate it from the control board’s input. The IM-1 is available from the manufacturer.

Powering Accessories
Accessories which require a 24v AC supply can be powered from the transformer output used to power the control board and motor. However, the transformer's current capacity must be checked to allow for the extra power required by the accessories.

Locks & Lights
Use the lock output terminals on the din rail to switch the 12 volts to an electric lock (if fitted). The load switched by the lock output terminals must not exceed 30v AC / DC @ 5Amps. If a electro magnetic lock is used, change one wire on the control board lock output to the normally closed output. Use the light relay module (if fitted) to switch the applied voltage to a light. The load switched by the light relay module must not exceed 240v AC / 30v DC @ 10 Amps.

Mode Selection
Using the mode selection dip-switches select the desired operating modes. Note the times associated with the parameters marked with an * can be changed. The auto-close times can be changed using the procedure in the following section. See the detailed installation manual for details on how to change the other parameters.

POSITION 1 Synchronising Delay
OFF - No delay
ON - Motor 1 starts to open 2 seconds* before Motor 2 and Motor 2 starts to close 2 seconds* before Motor 1.

POSITION 2 Pulse Lock Output
OFF - Lock output is activated for the entire motor drive cycle.
ON - Lock output pulses for 0.3 seconds* at the start of each drive cycle.

POSITION 3 Light Outputs Warning
OFF - Optional light module controls a light with timer which turns light off after 60seconds*.
ON - Optional light module controls a warning light which activates whenever motors are on.

POSITION 4 Swipe Mode (OSC Input)
OFF - OSC input terminal has standard Open, Close, Stop action.
ON - OSC input terminal will only open the door/gate. The input also resets the P.E triggered auto-close mode so that the P.E input will need to be triggered again before a P.E auto-close cycle will be initiated.

POSITION 5 M 2 Outputs Status
OFF - The M2 output controls second motor
ON - The M2 output controls status lights

POSITION 6 P.E Stops Close Cycle
OFF - Activating the P.E input while motors are closing causes the motors to reverse.
ON - Activating the P.E input while motors are closing causes the motors to stop but not reverse.

POSITION 7 P.E Stops Open Cycle
OFF - Activating the P.E input while motors are opening is ignored by the controller.
ON - Activating the P.E input while motors are opening causes the motors to stop.

POSITION 8 P.E Triggered Auto Close
OFF - Not selected
ON - Selects the P.E triggered auto-close mode which causes the motors to auto-close if the P.E input is activated then released. (Auto-close delay time is 0 seconds*)

POSITION 9 Pedestrian Auto-Close
OFF - No pedestrian access auto-close
ON - Selects auto-close in the pedestrian access mode. (Auto-close delay time is 15 seconds*)

POSITION 10 Standard Auto Close
OFF - Not selected
ON - Selects standard auto-close mode which will close the motors after fully opening.(Auto-close delay time is 30 seconds*)

Setting Cycle Timers & Auto Close Times

The control board has pre-set cycle times which are used to set the maximum time the controller will drive the motors in the open and closed directions. The pre-programmed time for the open and close cycle timer's is 60 seconds. The control board also has a pre-set pedestrian access time of 5 seconds which is intended to open the motor connected to M1 output only part way. If these default times do not suit your needs simply use the procedure below to adjust them. Note the same procedure can be used to adjust the auto-close times.

1. Place the slide switch into the 'set' position
2. Adjust the timer's value by pressing and holding the required push button for the desired time.
3. Repeat step 2 for the next timer (if desired).
4. Place the slide switch back into the 'RUN' position.
5. Test operation.

Make sure that the slide switch is placed back into the "RUN" position before testing the new timer value. As you can see the procedure used to set each timer's value is the same only the push button used changes. Each push button is clearly labelled underneath as to which timer's value it sets. Note when setting the OPEN, CLOSE and PEDESTRIAN cycle times the controller will drive the motors as if a "real" cycle is being executed. The difference being that the motors will stop as soon as the button is released or the limit switches are reached. The OPN status LED on the control board will flash at 1 second intervals to assist setting times. Note when setting the OPEN and CLOSE cycle times when limit switches are used, release the push button a few seconds after the limit switch cuts motor power. This allows for the motors to slow down over the life of the operators without the need to adjust again.

COMMISSIONING

- Position the gate so it is half way, tighten manual release knob just so the gate will drive.
- Power up board and with gate in the half way position, press transmitter or manual control switch so operator drives gate.
- Check which LED is flashing at the top right hand corner of CB6 board. If green LED is on (i.e. open) check gate is actually opening. If not, reverse motor wires.
- Check which limit switch stops gate in each direction and adjust cams so gate will stop in the fully open and closed positions.
- Limit switches should not switch off the gates too soon (before reaching the stops) and conversely not too late, so the torque limiter is operating.
- Tighten manual release knob and check that the torque limiter slips if there is an obstruction in the way of the gate but there is enough drive to overcome environmental conditions etc.
- Check that all safety devices work as designed and the external locks etc lock the gate.
- Install cover, using screws screwed in the front and sides to hold cover firm.
- Provide full details to the owner concerning the operation and relevant maintenance and disconnect details.

6. Manual Release Instructions

Should the power fail or for some other reason the gate does not operate in the normal motorised manner, manual disconnection can be achieved by:-

- Turn power off to the control box and isolate. Using key to open side door on gate operator cover,

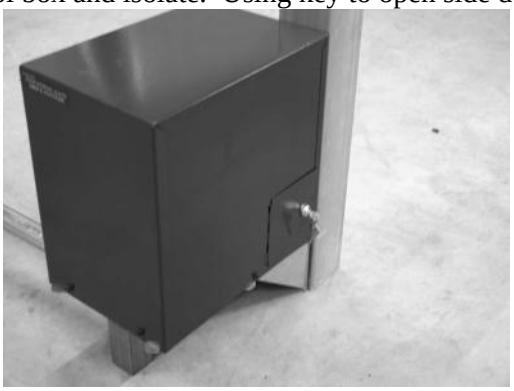

- Turn knurled disc anticlockwise for arm to be released from gearbox.

- If a magnetic lock is fitted, turn off the power to the control box.
- If an electric lock is fitted, release with the electric lock key provided.

The gate will now open manually. Ensure gate is held firm so it does not close on someone or something.

- To engage drive, turn knurled knob clockwise until tight. Close and lock cover door with key.

4. MAINTENANCE DETAILS

WARNING!

Failure to maintain equipment may result in injury or death and/or damage to property and equipment

Recommended maintenance to be performed on the operator and gate are as follows:-

Operator performs over 150 cycles a day	each month
Operator performs between 100-150 cycles a day	every 2 month
Operator performs between 50-99 cycles a day	every 4 months
Operator performs between 20-49 cycles a day	every 6 months
Operator performs under 20 cycles a day	every 12 months

Date: .....

Site Name:.....

Site Address: .....

Before commencing maintenance on the operator, isolate the electrical supply to ensure operator will not run inadvertently.

Gate hinges in good condition and oiled/greased ..... ☐

Gate swings freely ..... ☐

Gate stops in good condition..... ☐

Gate operator mounting bolts tight ..... ☐

All arm joints loose but firm..... ☐

No oil leaks from gearboxes ..... ☐

Gearbox drive cogs tight on shafts..... ☐

Gearbox mounting bolts/nuts tight..... ☐

Inside operator and control box clean..... ☐

'Baygon' Surface Spray around operator and control box (not on electronics)..... ☐

Torque limiter chain slightly oiled..... ☐

All electrical connections tight ..... ☐

Limit Switches operate in appropriate positions (if applicable) ..... ☐

External safety devices work effectively ..... ☐

External locks operate correctly..... ☐

General operation i.e. speed, auto close etc normal..... ☐

Arm taper lock grub screws tight ..... ☐

Comments .....

.....

Service performed by .....

5. WARRANTY

a. Gate Drive Systems Australia warrants that the goods manufactured by it shall be free from defect in manufacture for a period of 12 months from the date of invoice. Should any fault occur within that period as a result of faulty workmanship or materials, Gate Drive Systems Australia will make all necessary repairs, or at its discretion replace the product at no charge to the Customer except for freight. The appropriate Serial Number must be quoted for all warranty claims.

b. For the goods not manufactured by Gate Drive Systems Australia , we shall pass on the manufacturers warranty to the Customer from the date of invoice. It is the manufacturers discretion to repair or replace goods deemed to be defective as a result of faulty workmanship or materials.

c. All goods must be returned to Gate Drive Systems Australia or its representative for inspection or testing to assess if a claim is justified. It is the responsibility and at the cost of the Customer, to return the goods for inspection and freight costs are the responsibility of the Customer.

d. The warranty is negated and will not apply in the following circumstances:-
   i. If no proof of date of purchase can be produced.
   ii. If the product has been used in a manner beyond its design parameters.
   iii. If the product is tampered with or repaired by personnel not authorised to do so.
   iv. In respect of loss or damage caused by rough treatment.
   v. If the product is not used and maintained in accordance with instructions or recommendations listed in this Installation and Maintenance Manual.
   vi. In respect of loss or damage caused by an Act of God or any other cause not within the manufacturers control.

e. Goods returned under warranty for repair or testing will incur a charge to be fixed by the manufacturer if no fault is found.

f. The Customer shall bear freight charges for returning the goods for inspection and for the delivery of any replacement or repaired product from a justified warranty claim.

g. Save for the express conditions and warranties herein contained all other conditions or warranties (whether as the quality, fitness for purpose or any other matter) expressed or implied by statute, common law, equity, trade custom, usage or otherwise are hereby expressly excluded provided that nothing in these terms and conditions shall exclude or limit any breach or condition implied by law, the exclusion or limitation of which is not permitted by law.

CONTROL BOARD LAYOUT FOR 24v OPERATORS

FIG. 4

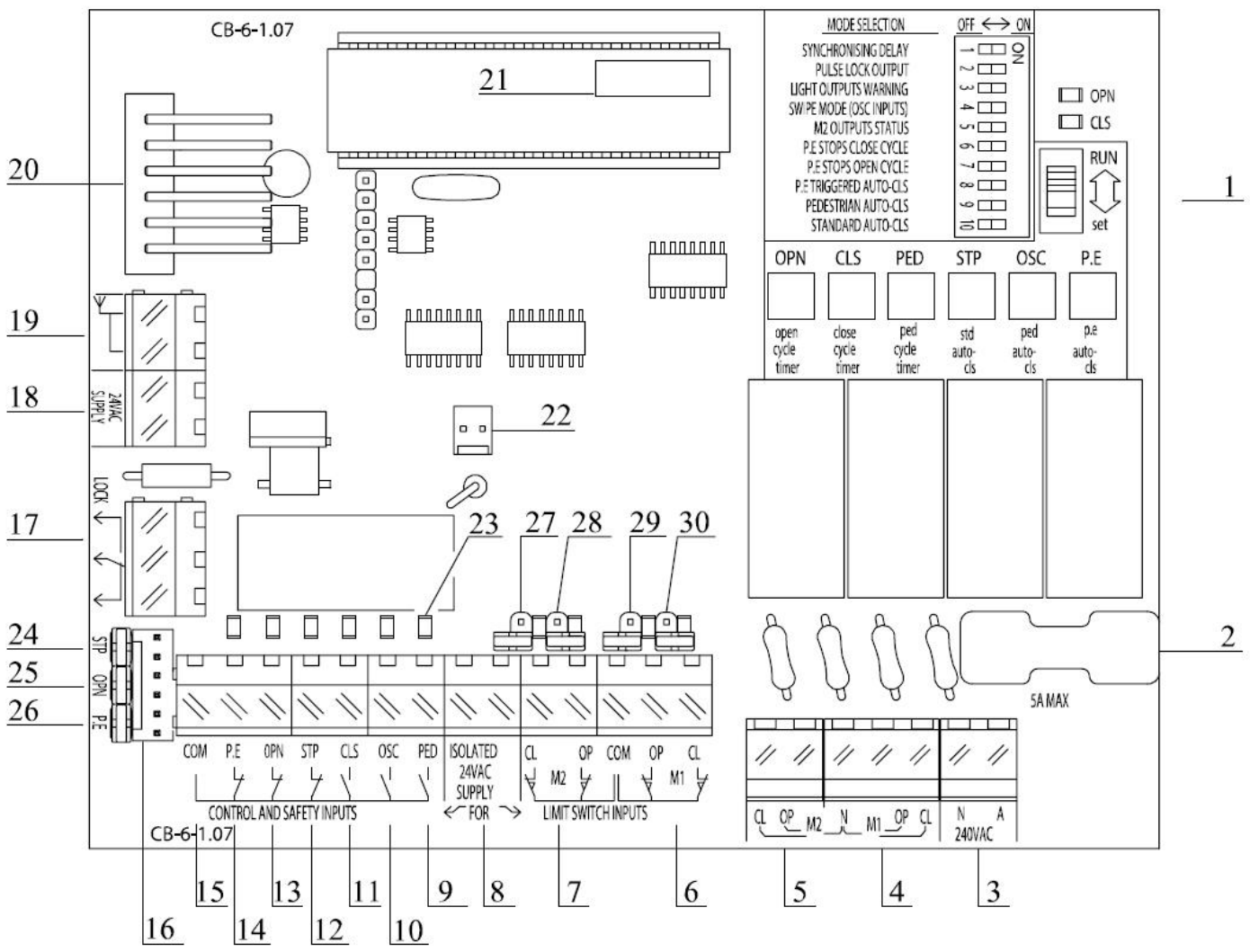

1. Mode Selection and Adjustment
2. Protection Fuse
3. Inverter Input Terminals
4. Motor 1 Drive Output Terminals for Contactors
5. Motor 2 Drive Output Terminals for Contactors
6. Motor 1 Limit Switch Inputs
7. Motor 2 Limit Switch Inputs
8. Terminals for Isolated 24vAC Supply for Limit Switch and Control Inputs
9. Pedestrian Access Control Input
10. Open/Stop/Close Control Input
11. Close Control Input
12. Stop Control Input
13. Open Control Input
14. Photoelectric Safety Beam Input
15. Common Terminal for Inputs [9] Thru [14].
16. Control Input Harness Connector
17. Electric Lock Control Terminals
18. Terminals for 24vAC Supply for Control Logic
19. Plug In Receiver's Antenna Terminals With Optional Shield
20. Connector for Plug-In Receiver (not shown)
21. Firmware Version Label
22. Light Control Relay Interface Connector
23. Input Status L.E.Ds.
24. Stop Input Jumper
25. Open Input Jumper
26. PE Beam Input Jumper
27. M2 Close Limit Jumper
28. M2 Open Limit Jumper
29. M1 Close Limit Jumper
30. M1 Open Limit Jumper

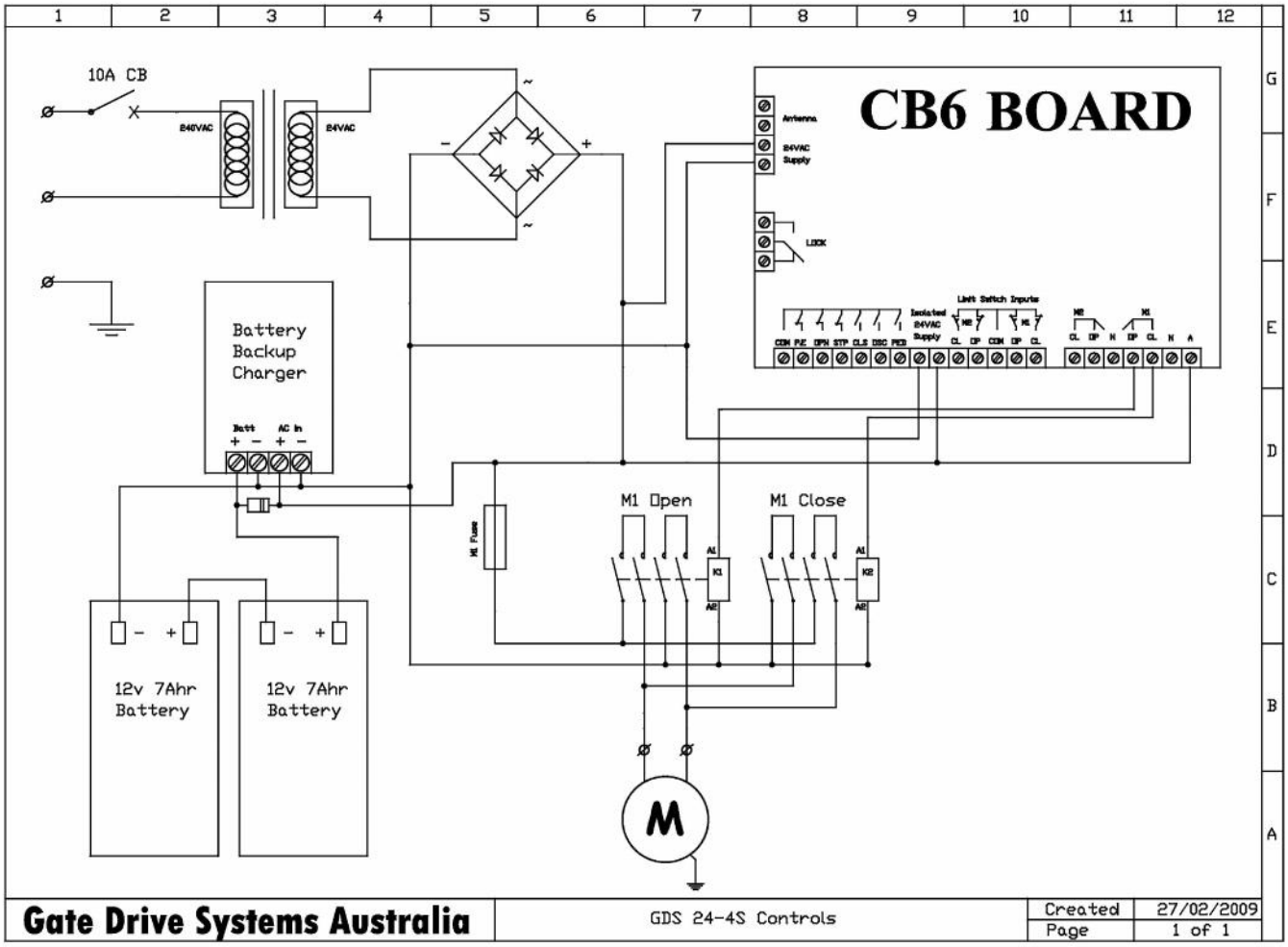
10A CB
240VAC
24VAC
CB6 BOARD
Antenna
24VAC Supply
LOCK
Limit Switch Inputs
Isolated 24VAC Supply
CCM P/E OPN STP CLS DSC PED
CL OP CCM OP CL
M2 M1
CL OP N OP CL N A
Battery Backup Charger
Batt AC In
M1 Fuse
M1 Open
M1 Close
A1 K1 A2
A1 K2 A2
12v 7Ahr Battery
12v 7Ahr Battery
M
Gate Drive Systems Australia
GDS 24-4S Controls
Created 27/02/2009
Page 1 of 1

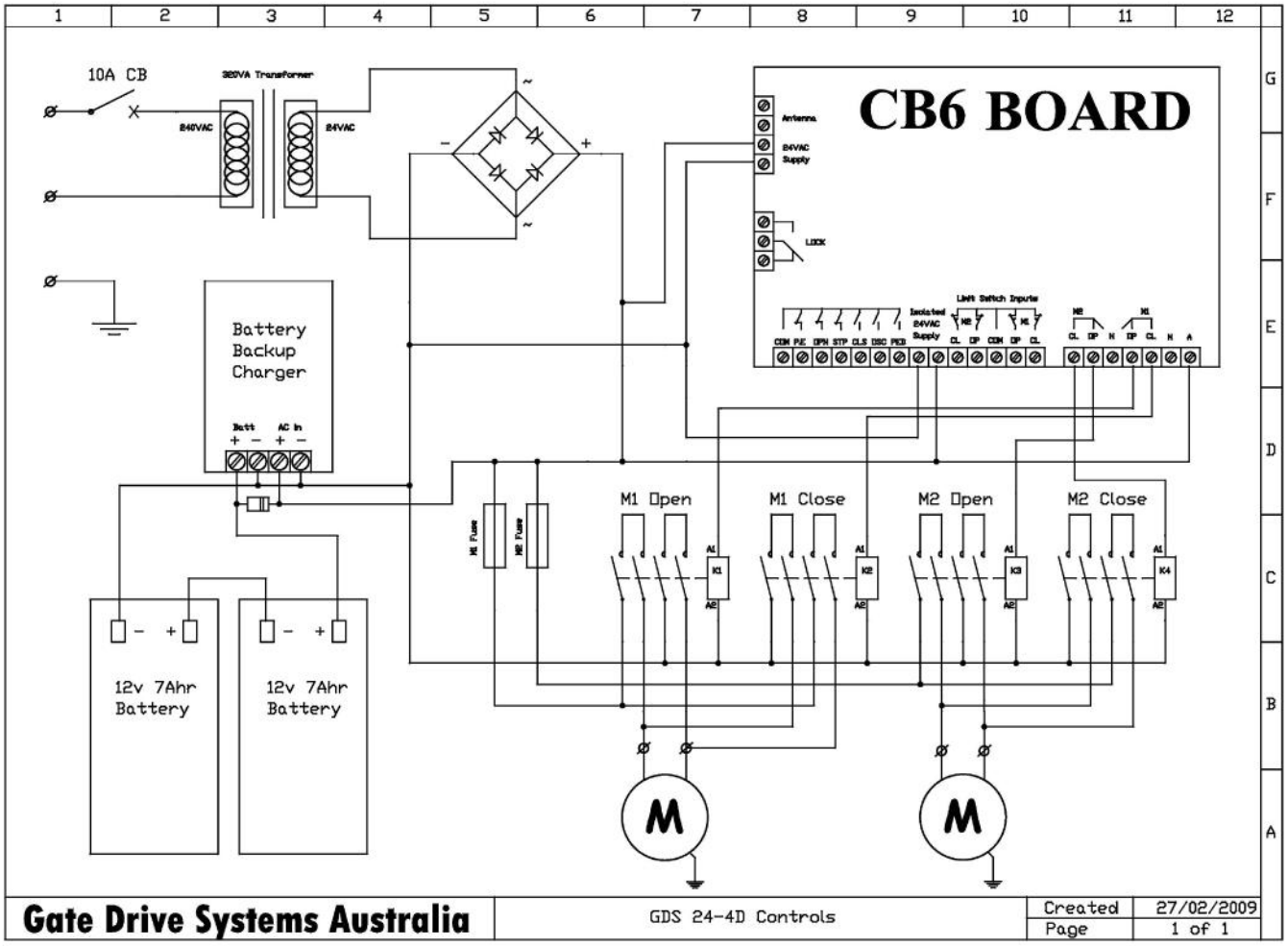
10A CB
320VA Transformer
240VAC
24VAC
CB6 BOARD
Antenna
24VAC Supply
LOCK
Limit Switch Inputs
Isolated 24VAC Supply
CCM P/E OPN STP CLS DSC PED
CL OP CCM OP CL
M2 M1
CL OP N OP CL N A
Battery Backup Charger
Batt AC In
M1 Fuse
M2 Fuse
M1 Open
M1 Close
M2 Open
M2 Close
A1 K1 A2
A1 K2 A2
A1 K3 A2
A1 K4 A2
12v 7Ahr Battery
12v 7Ahr Battery
M
M
Gate Drive Systems Australia
GDS 24-4D Controls
Created 27/02/2009
Page 1 of 1

SELF INSTALL - NEED TECHNICAL ASSISTANCE?

OPTION 1: DIRECT WITH THE SERVICE DESK – QUICKEST AND MOST EFFECTIVE METHOD

Submit your enquiry direct with the service desk at – service@automaticsolutions.com.au
The service desk has the most experienced staff in Australia to help with your problem but they need your help.

- **Describe your problem in detail and as clearly as possible. Don't forget to include a telephone number.**
- **Be certain to detail which model or models of you are working with.**
- **Send photos of the installation – they love photos. The people at the service desk are good but they are even better when they can see the installation. Send photos of the overall scene so they can see the entire installation. Also send photos of the wiring to the control board and any other part of the installation you think is relevant.**
- **Send video if appropriate. Smartphone's these days take remarkably good video in small file sizes which can be emailed in a moment. If your problem needs a video to show the issue please feel free to send it.**

NOTE: THIS IS BY FAR THE FASTEST AND MOST SUCCESFUL WAY TO SOLVE YOUR PROBLEM
PHOTOS AND VIDEOS ARE THE NEXT BEST THING TO BEING THERE

OPTION 2: LODGE YOUR ENQUIRY LOCALLY - SLOWER BUT CAN STILL BE EFFECTIVE

Make contact with the store of purchase. Branch staffs are typically not technicians and dependent on their length of service will have varying degrees of technical knowledge. If they cannot help however they will certainly either source help locally from their technicians or make contact with the service technicians on your behalf.

OPTION 3: SERVICE CALL WITH AUTOMATIC SOLUTIONS TECHNICIAN – SLOWEST METHOD

If you fall within the local branch service area it may be possible to book a local technician to look at your installation. Wait times will vary dependent on local workloads. The cost is a service fee which includes the first half hour and the hourly rate thereafter. If any Automatic Solutions provided parts are found to be defective and within warranty these will be provided free of charge.
(NOTE: If you suspect that any parts are defective and within warranty you may wish to consider option 4)

A note on this option: If you decide on this option you will be asked to sign an "authorisation to proceed" which will provide legal authority and payment security. This form has three options available of which only the first two are available to you. The third option is for warranty repairs only for full install customers. Self install customers requiring warranty only service need to refer to option four below.

IMPORTANT: IN SHORT THIS OPTION WILL INCUR CHARGES

OPTION 4: RETURN THE PRODUCT IF BELIEVED TO BE FAULTY

As a self install customer who has purchased product if you believe the product to be faulty rather than an installation or site problem you have the option of returning the product for evaluation and to exercise your right to a replacement, repair or refund as applicable. All returned product is forwarded immediately to the service technicians for evaluation and response. There are two main methods available to return product –

- **Direct to the service centre – this is the quickest method as it cuts out the branch delay**
- **Via the branch of purchase – slower because of the delay at the branch**

When choosing this option you need to complete a product return form. This form gives you all the information on procedure involved and where to send to. These are available at the branch of purchase, can be emailed to you (contact your branch), or available here - http://automaticsolutions.com.au/page/warranty.php